ONX-175 SL

Florida Product Approval: FL # 42097.4

Approved for installation inside HVHZ and Non-HVHZ

Material: 24ga steel.
Panel Description: Snap lock 16” (max) wide coverage.
Deck/Substrate: 1/2” (15/32” min) CDX Plywood sheeting
Slope : 2:12” (HVHZ), ½:12” (Non-HVHZ)
Details: All panel system perimeters, Penetrations and Transitions to be flashed and sealed per Manufacturer’s standard installation details and RAS 133.

2801 NW 55th Ct
Fort Lauderdale
Florida, 33309

954-323-8494
office@onyx-metals.com

ONX-175 SL

FL # 42097.4

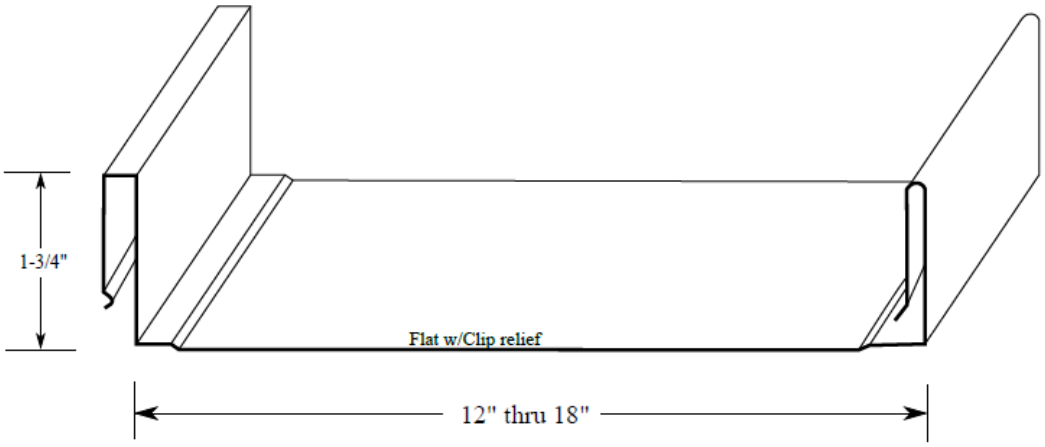

Installation method:

	System #1	System #2
Max Design Pressure	-97.25 psf	-101 psf
Clip spacing	16” o.c.	6” o.c.

2801 NW 55th Ct
Fort Lauderdale
Florida, 33309

954-323-8494
office@onyx-metals.com

ONX-175 SL

FL # 42097.4

ONYX METALS 1 3/4" SNAPLOCK ROOF PANEL, 24 Ga. STEEL, 16" WIDE, OVER 1/2" PLYWOOD.

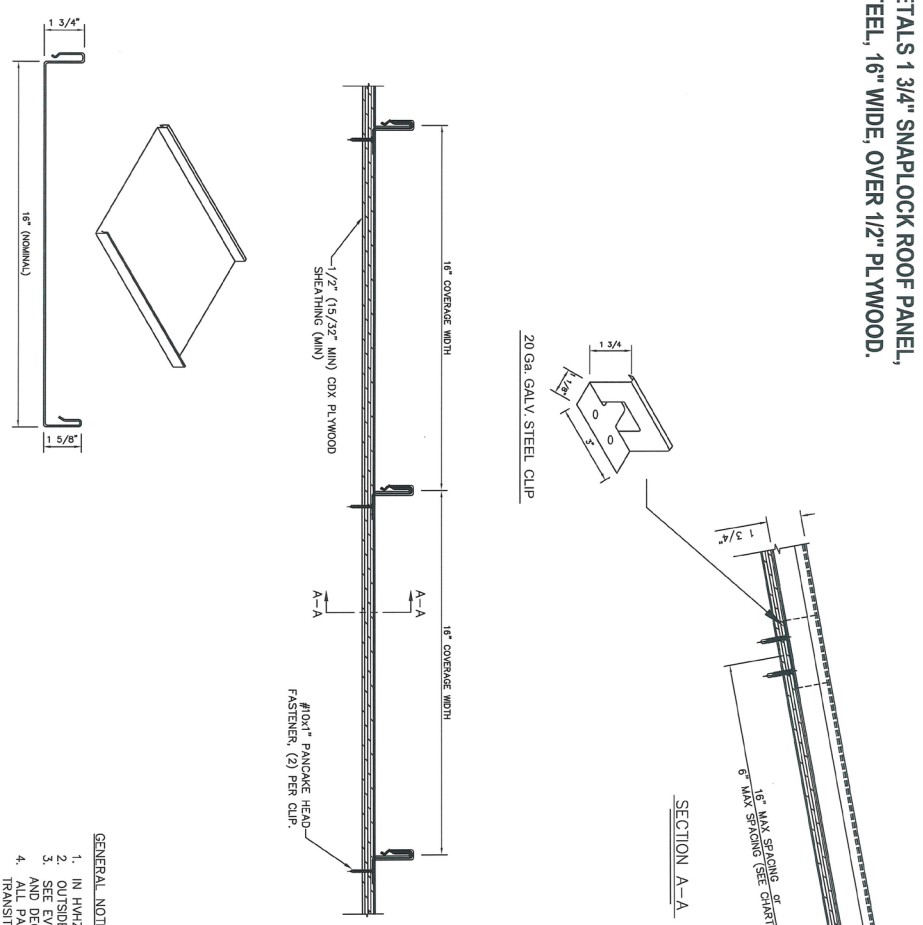

CLIP ANCHOR SPACING (in)	MAX DESIGN PRESSURE (psf)
18" O.C.	-97.25
6" O.C.	-101

GENERAL NOTES:

1. IN HVHZ, MIN. ROOF SLOPE IS 2":12".
2. OUTSIDE OF HVHZ, MIN ROOF SLOPE IS 1/2":12"
3. SEE EVAL REPORT FOR UNDERLAYMENT, FIRE BARRIER, AND DECK FASTENER INFO.
4. ALL PANEL SYSTEM PERIMETERS, PENETRATIONS, AND TRANSITIONS TO BE FLASHED AND SEALED PER THE MANUFACTURER'S STANDARD INSTALLATION DETAILS AND RAS 133.

ONYX METALS

2801 NW 55TH CT, BUILDING 1
FORT LAUDERDALE, FL 33309

PH: (954) 323-8494
www.onyx-metals.com

SCOTT WOLTERS
FL PE# 62354

WOLTERS ENGINEERING
(COA# 27194)
15211 97TH ROAD N
WEST PALM BEACH, FL 33412
(561) 225-1982

SEAL: Scott Wolters

SCOTT WOLTERS LICENSE NO. 62354 STATE OF FLORIDA PROFESSIONAL ENGINEER

AUG 18 2023

PRINTS ISSUED FOR	REV.#	DATE
1ST SUBMITTAL	–	8/18/23

DWG: OMSSL-HZ
SHEET: 1/1

2801 NW 55th Ct
Fort Lauderdale
Florida, 33309

954-323-8494
office@onyx-metals.com